Miniature Cermet Trimmer Potentiometers

6mm Size

■ Features

- Both Phillips and flat-head screwdriver is available for adjustment.
- Automatic adjustable
- Achieved good endurance characteristics by using "Metal-glaze" for the material of resistor
- Conforms to RoHS Directives (Lead-Free Products)

■ Outline Dimensions (Unit : mm)

TH1

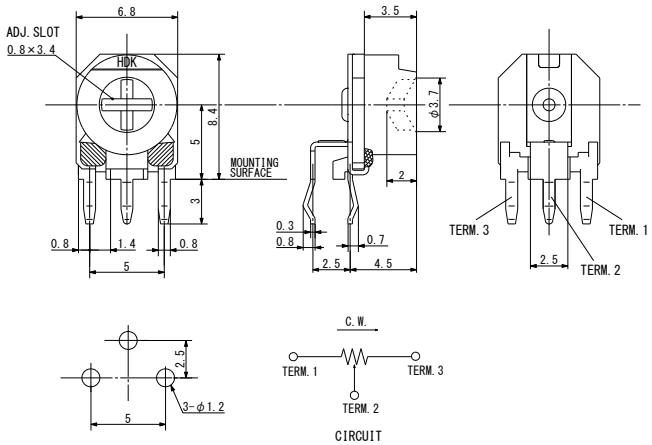

TL1

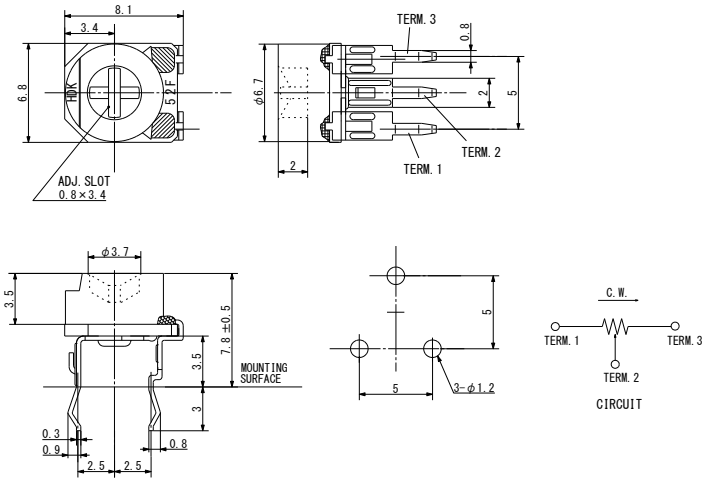

■ Specification

Item	Specification	Unit	Note
Nominal Total Resistance	100～1M	Ω	
Resistance Tolerance	±25	%	
Rotational Torque	2.94～29.4	mN.m	
Effectively Rotary Angle	240 ± 10	°	
Rated Wattage	0.2（at 70℃）、0（at 100℃）	W	
Max. Rated Voltage	100 or V= $\sqrt{PR}$ whichever is smaller	V	
T.C.R（Temperature Coefficient）	±250	ppm/℃	
Operating Temp. Range	-25 ～ +100	℃	

■ Part Designation

VG F 67 T H1 B＊＊＊

- B＊＊＊ — Resistance law and Resistance value (3 figures)
- H1 — Mounting, Terminal（H1 : Vertical, L1 : Horizontal）
- T — Knob type (Cross slot type)
- 67 — Size
- F — Lead-Free type
- VG — Resistive element type : Metal-glaze

＊Packaging Quantity : 500 pcs / bag

Miniature Cermet Trimmer Potentiometers

6mm Size

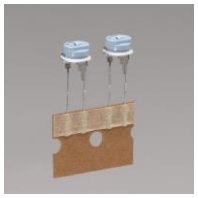

■ Features

- Both Phillips and flat-head screwdriver is available for adjustment.
- Automatic adjustable
- Achieved good endurance characteristics by using "Metal-glaze" for the material of resistor
- Conforms to RoHS Directives (Lead-Free Products)

■ Outline Dimensions (Unit : mm)

THT

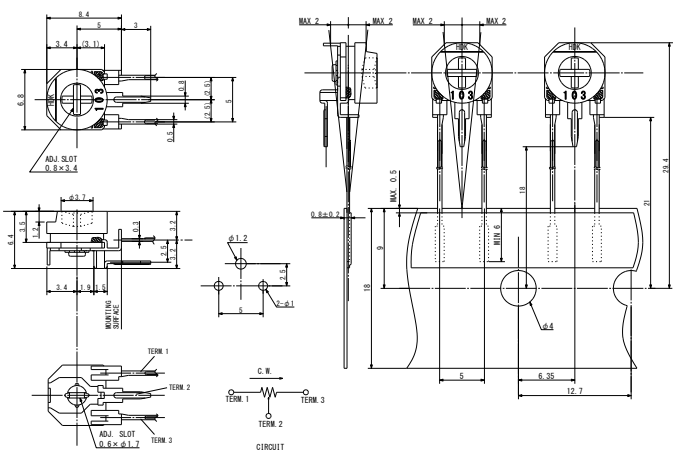

TLTA

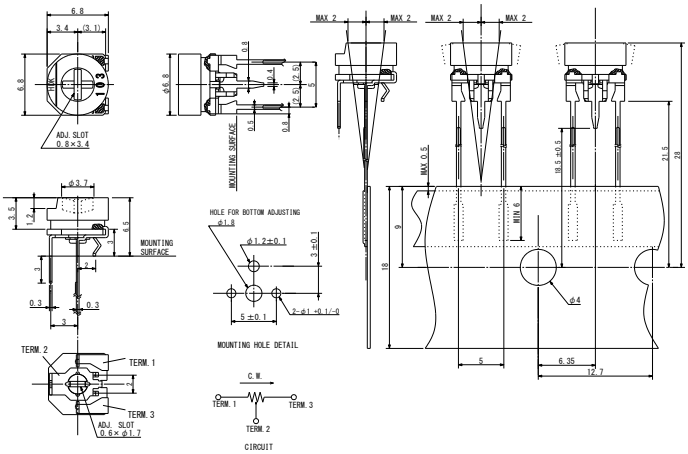

■ Specification

Item	Specification	Unit	Note
Nominal Total Resistance	100～1M	Ω	
Resistance Tolerance	±30	%	
Rotational Torque	0.98～29.4	mN.m	
Effectively Rotary Angle	240 ± 10	°	
Rated Wattage	0.3（at 70°C）、0（at 100°C）	W	
Max. Rated Voltage	100 or V= √PR whichever is smaller	V	
T.C.R（Temperature Coefficient）	±250	ppm/°C	
Operating Temp. Range	-25 ～ +100	°C	

■ Part Designation

N VG F 6 T HT B＊＊＊

- B＊＊＊ — Resistance law and Resistance value (3 figures)
- HT — Mounting, Terminal（HT : Vertical type taping, LTA : Horizontal type taping）
- T — Knob type (Cross slot type)
- 6 — Size
- F — Lead-Free type
- VG — Resistive element type : Metal-glaze
- N — Type

＊Packaging Quantity : 1,000pcs／box